QUATTRO

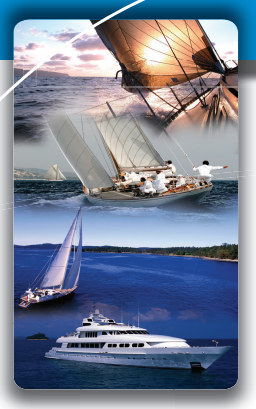

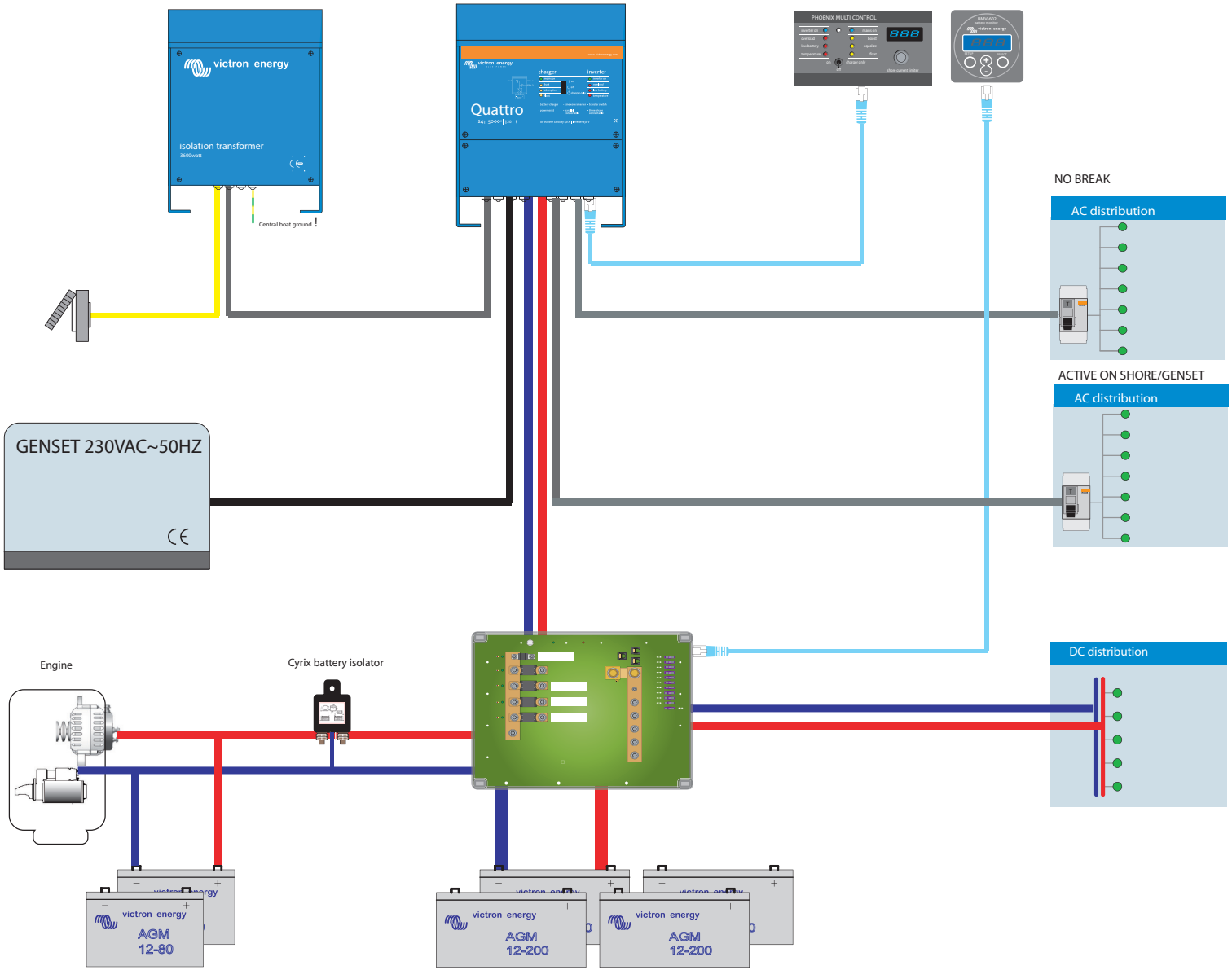
victron energy
isolation transformer
Central boat ground
Quattro
PHOENIX MULTI CONTROL
NO BREAK
AC distribution
ACTIVE ON SHORE/GENSET
AC distribution
GENSET 230VAC~50HZ
Engine
Cyrix battery isolator
DC distribution
victron energy
AGM
12-80
victron energy
AGM
12-200
victron energy
AGM
12-200