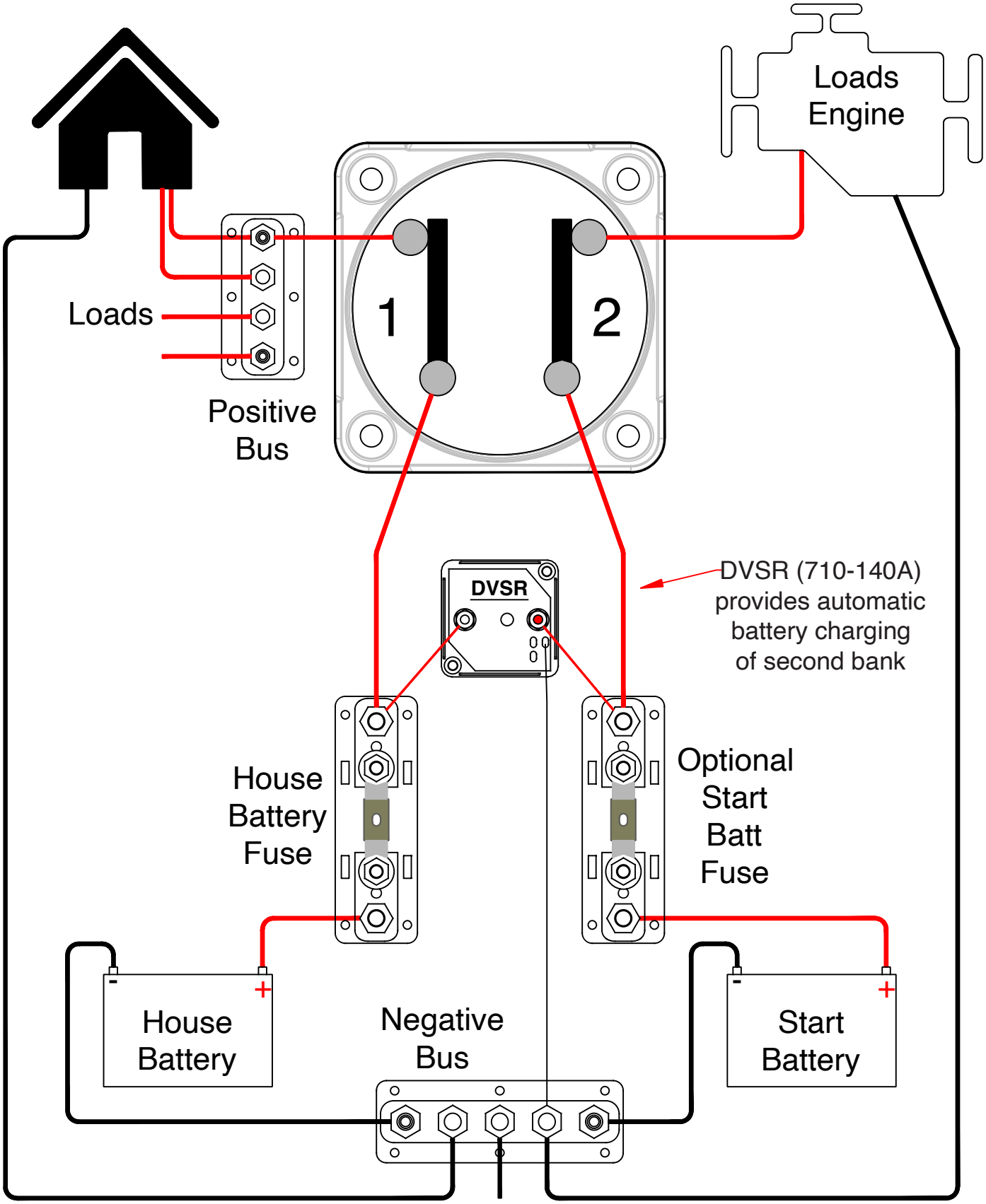
Loads
Engine
Loads
1
2
Positive
Bus
DVSR
DVSR (710-140A)
provides automatic
battery charging
of second bank
House
Battery
Fuse
Optional
Start
Batt
Fuse
House
Battery
Negative
Bus
Start
Battery